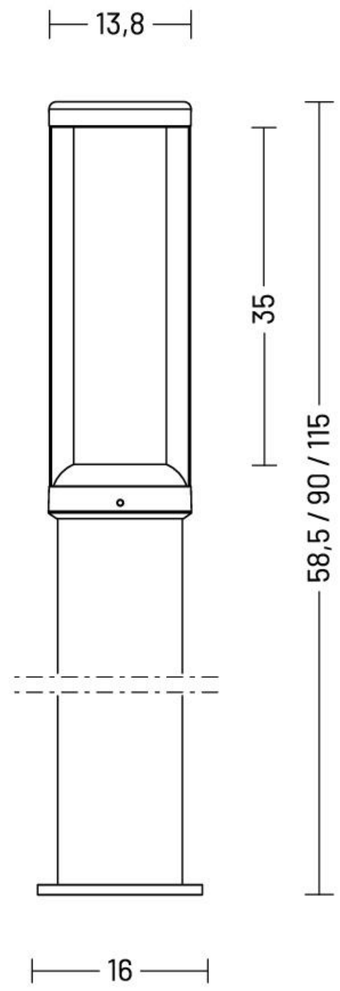

MATERIALS

Body	Die-cast aluminium EN47100 and extruded aluminum EN AW6060
Diffuser	Extra clear polycarbonate
Finishing	Polyester powder paint

ORDER CODE

PO 3 0 ___ D _ B 1 0 _

Finishing

L	Graphite	
M	Light grey	
V	Oxide	

Light colour

N	4000 K
H	3000 K

Height

060	58.5 cm
090	90 cm
115	115 cm

Example PO 3 0 **060** D **N** B 1 0 **L**

AVAILABLE ACCESSORIES

Code	*Description*	*Page*
00A405.01P	Anchor bolt	484
00A405	Root mounting kit	484
0404M004	Single connection IP68	484
0404M003	Loop-in loop-out IP68	485