Oxygen_S | Ceiling luminaires | 220-240 V | topLED 36 W

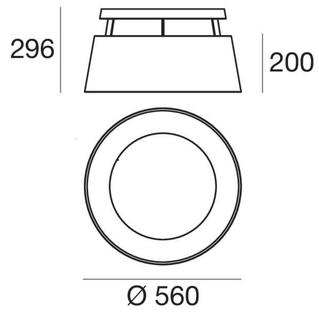

type			colour	optics
Wh. Wh.	CRI 90	**8081**	3000 K 4042 lm	diffused
Bl. Wh.	CRI 90	**8082**		
Yel. Wh.	CRI 90	**8083**		
Azu. Wh.	CRI 90	**8084**		

Oxygen_S | Ceiling luminaires | 220-240 V | topLED 50 W

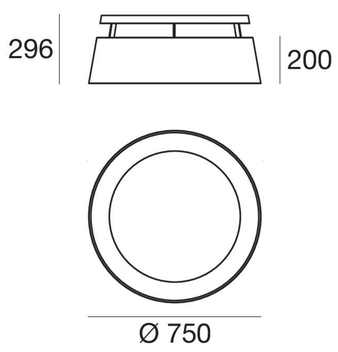

type			colour	optics
Wh. Wh.	CRI 90	**8085**	3000 K 5670 lm	diffused
Bl. Wh.	CRI 90	**8086**		
Yel. Wh.	CRI 90	**8087**		
Azu. Wh.	CRI 90	**8088**		

Oxygen
Azure | White finish