Zebra_S | Ceiling Lights | 220-240 V | topLED 35 W 920 mA

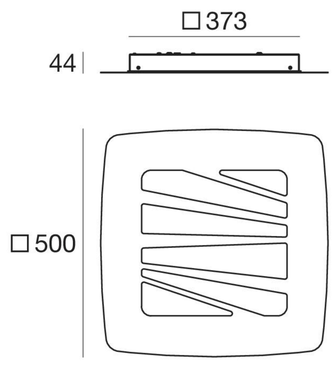

new

IP40

type	colour	optics
White CRI 80 **8248**	3000 K 3913 lm	diffused

Zebra_S | Ceiling Lights | 220-240 V | topLED 46 W 1050 mA

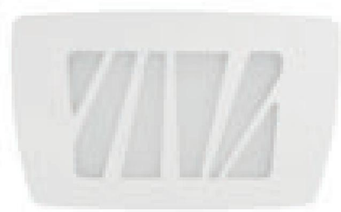

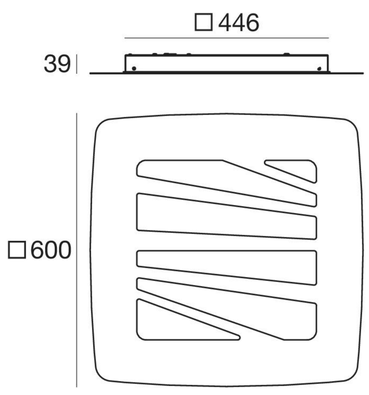

new

IP40

type	colour	optics
White CRI 80 **8249**	3000 K 4907 lm	diffused