Thank You_S | Ceiling Light | 220-240 V | 1xE27

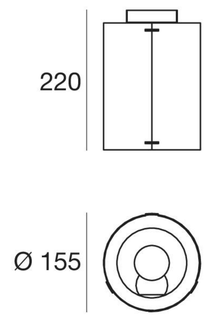

new

IP20

type		source	optics
White / Ash Wood	**8049**	1x57 W Max	diffused
White / Mesh	**8050**		
Brown / Ash Wood	**8051**		
Brown / Mesh	**8052**		

Thank You_W1 | Wall Lights | 220-240 V | 1xE27

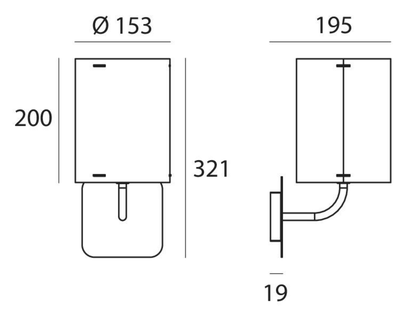

new

IP20

type		source	optics
White / Ash Wood	**8053**	1x57 W Max	diffused
White / Mesh	**8054**		
Brown / Ash Wood	**8055**		
Brown / Mesh	**8056**		

Thank You_W2 | Wall Lights | 220-240 V | 1xE27

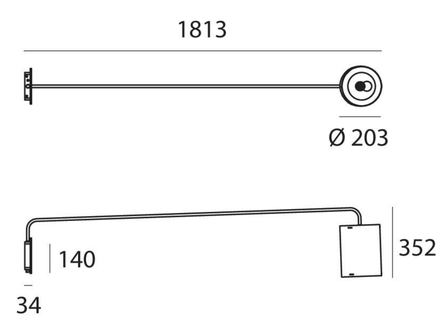

new

IP20

type		source	optics
White / Ash Wood	**8073**	1x57 W Max	diffused
White / Mesh	**8074**		
Brown / Ash Wood	**8075**		
Brown / Mesh	**8076**		

Thank You_W3 | Wall Lights | 220-240 V | 1xE27

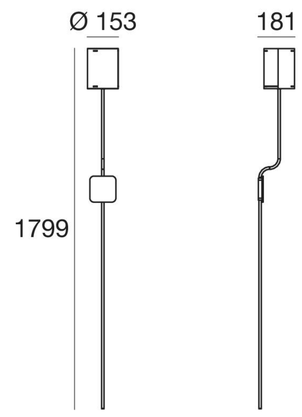

new

IP20

type		source	optics
White / Ash Wood	**8069**	1x57 W Max	diffused
White / Mesh	**8070**		
Brown / Ash Wood	**8071**		
Brown / Mesh	**8072**		