Gypsum_D1 | Downlights | 220-240 V | topLED 13 W 350 mA

IP40

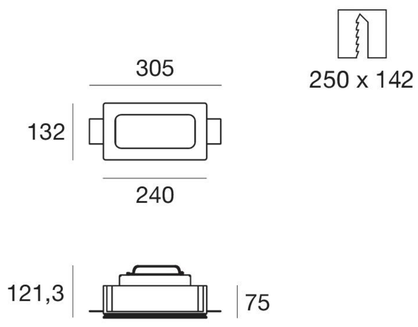

type			colour			optics	
White	CRI 80	**64501**	3000 K	1610 lm	**W**	diffused	**00**

Suggested accessories

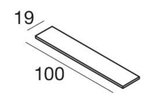

60830

Shim

Gypsum_D2 | Downlights | 198-264 V | topLED 32 W 900 mA

IP40

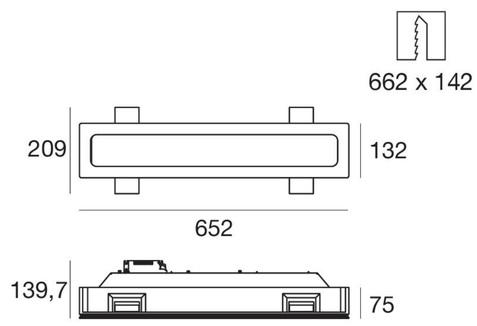

type			colour			optics	
White	CRI 80	**64502**	3000 K	4140 lm	**W**	diffused	**00**

Suggested accessories

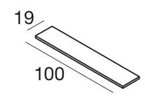

60830

Shim

Gypsum_D3 | Downlights | 198-264 V | topLED 26 W 700 mA

IP20

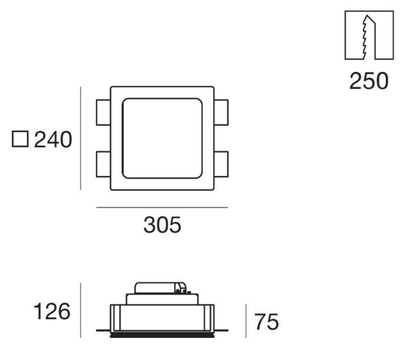

type			colour			optics	
White	CRI 80	**64504**	3000 K	3220 lm	**W**	diffused	**00**

Suggested accessories

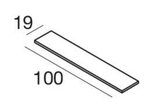

60830

Shim

Gypsum_DX | Downlights | 198-264 V | topLED 51 W 1400 mA

IP20

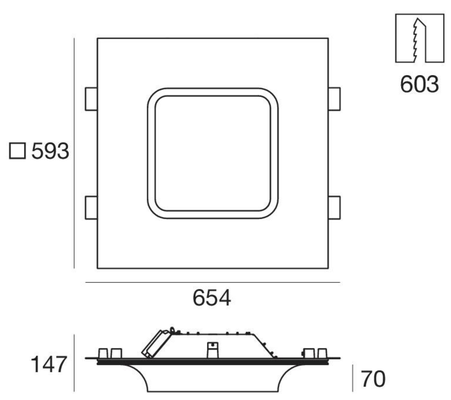

type			colour			optics	
White	CRI 80	**64503**	3000 K	6440 lm	**W**	diffused	**00**

Suggested accessories

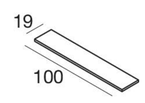

60830

Shim