Conus_S1 | Ceiling Lights | 220-240 V | arrayLED 6 W 120 mA

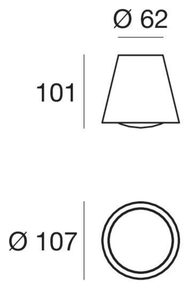

type			colour		optics
White	CRI 90	**7251**	3000 K	605 lm	diffused
Black	CRI 90	**7531**			

Conus_S1 | Ceiling Lights | 220-240 V | topLED 7 W 350 mA

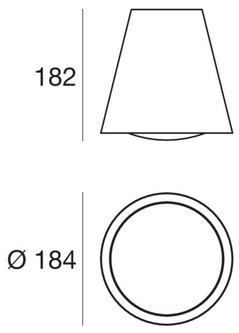

type			colour		optics
White	CRI 90	**7257**	3000 K	907 lm	diffused
Black	CRI 90	**7533**			

Conus_S2 | Ceiling Lights | 220-240 V | topLED 19 W 500 mA

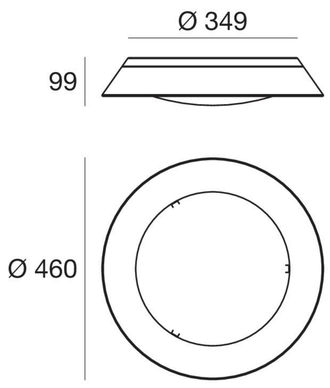

type			colour		optics
White	CRI 90	**7272**	3000 K	2364 lm	diffused
Black	CRI 90	**7537**			

Conus_S3 | Ceiling Lights | 220-240 V | topLED 2 W 500 mA

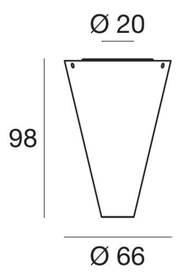

type			colour		optics
White	CRI 90	**7287**	3000 K	90 lm	70°
Black	CRI 90	**7542**			