## **Hive_P** | Pendant Luminaires | 220-240 V | topLED 36 W (down) + arrayLED 9 W (up) 500 mA

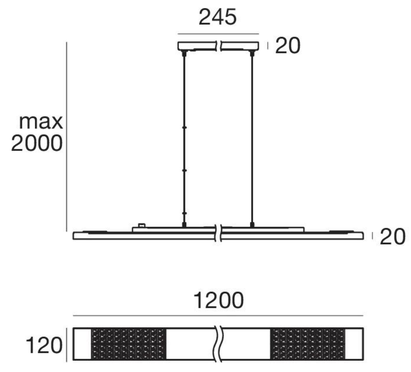


| type | | | colour | | | optics | |
|---|---|---|---|---|---|---|---|
| White | CRI 80 | **63254** | 4000 K | 5430 lm | **N** | diffused | **00** |

## **Hive_FL** | Free Standing | 220-240 V | topLED 38 W (down) + arrayLED 18 W (up) 500 mA

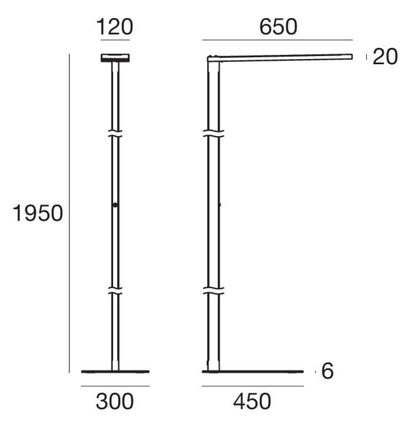


| type | | | colour | | | optics | |
|---|---|---|---|---|---|---|---|
| White | CRI 80 | **63274** | 4000 K | 6330 lm | **N** | diffused | **00** |

**Motion sensor included**

## **Hive_FL** | Free Standing | 220-240 V | topLED 38 W (down) + arrayLED 18 W (up) 500 mA

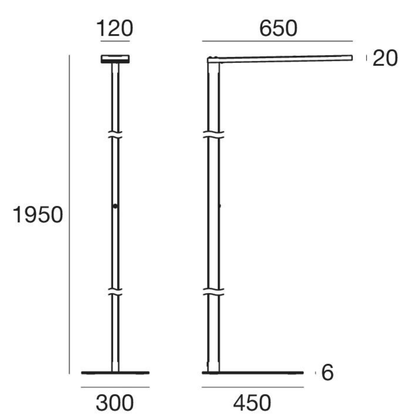


| type | | | colour | | | optics | |
|---|---|---|---|---|---|---|---|
| White | CRI 80 | **63264** | 4000 K | 6330 lm | **N** | diffused | **00** |