Wall_1 | Wall Lights | 220-240 V | arrayLED 3,2 W 350 mA

IP20

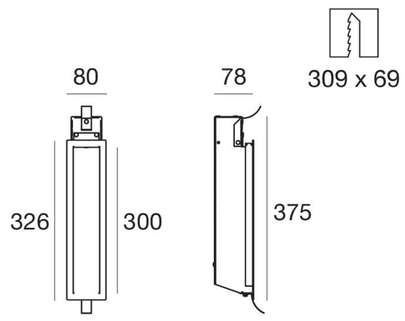

type			colour			optics	
White	CRI 80	**63674**	3000 K	436 lm	**W**	diffused	**00**

Accessories suggested

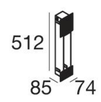

51790

Outer casing

Wall_2 | Wall Lights | 220-240 V | topLED 5,5 W 150 mA

IP20

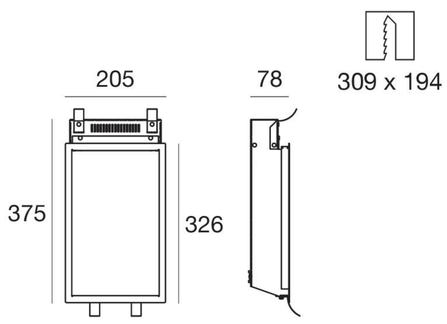

type			colour			optics	
White	CRI 80	**63684**	3000 K	839 lm	**W**	diffused	**00**

Accessories suggested

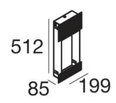

51780

Outer casing

Wall_3 | Wall Lights | 220-240 V | topLED 5,5 W 150 mA

IP20

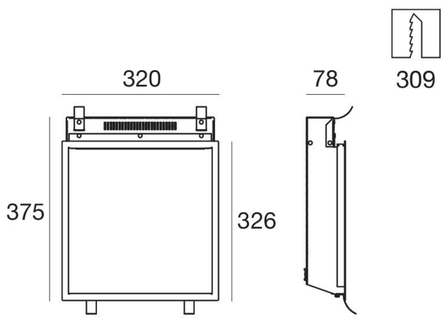

type			colour			optics	
White	CRI 80	**63694**	3000 K	839 lm	**W**	diffused	**00**

Accessories suggested

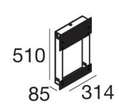

51770

Outer casing