Gypsum_Eye1 | Downlights | arrayLED 7,5 W 200 mA

C.C. IP40 o.c. IP20

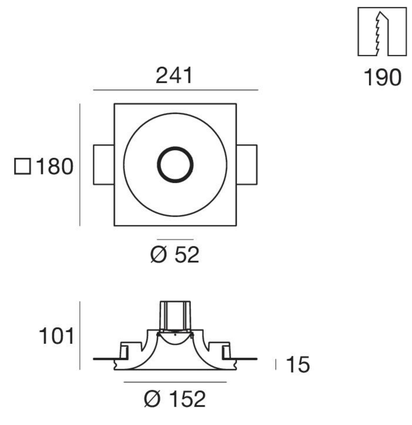

type			colour			optics	
White	CRI 80	**61340**	3000 K	1117 lm	**W**	70°	**70**
			4000 K	1153 lm	**N**		

Suggested electronics

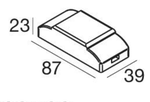

62423
ON/OFF
1 art.

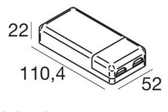

62431
1-10V/PUSH
1 art.

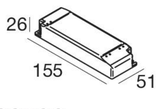

62432
DALI/PUSH
1 art.

Suggested accessories

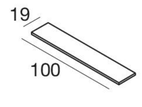

60830
Shim

Gypsum_Eye2 | Downlights | arrayLED 12,5 W 350 mA

C.C. IP40 o.c. IP20

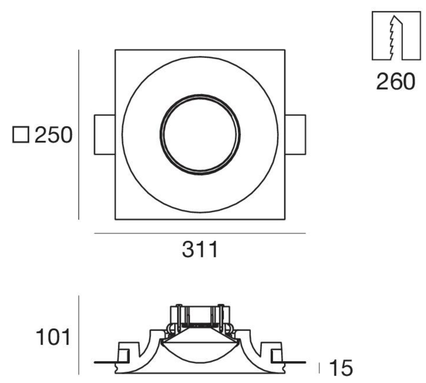

type			colour			optics	
White	CRI 80	**60852**	3000 K	1876 lm	**W**	50°	**50**
			4000 K	1938 lm	**N**		

Suggested electronics

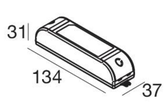

99126
ON/OFF
1 art.

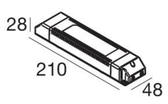

99115
1-10V/PUSH
1 art.

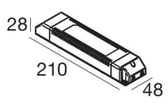

99114
DALI/PUSH
1 art.

Suggested accessories

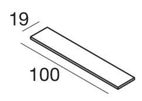

60830
Shim

Gypsum_Eye3 | Downlights | arrayLED 12,5 W 350 mA

C.C. IP40 o.c. IP20

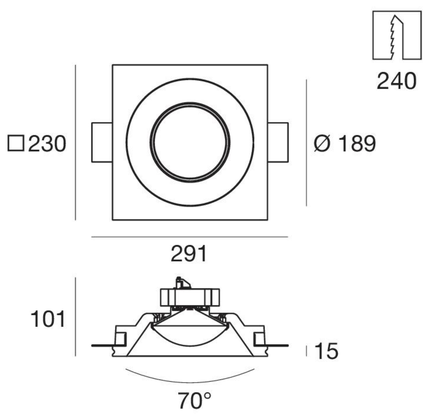

type			colour			optics	
White	CRI 80	**60853**	3000 K	1876 lm	**W**	50°	**50**
			4000 K	1938 lm	**N**		

Suggested electronics

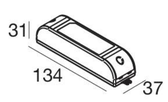

99126
ON/OFF
1 art.

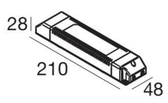

99115
1-10V/PUSH
1 art.

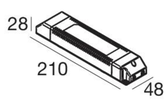

99114
DALI/PUSH
1 art.

Suggested accessories

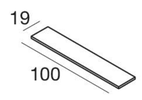

60830
Shim

Gypsum_Eye4 | Downlights | 110-240 V | topLED 21 W

IP40

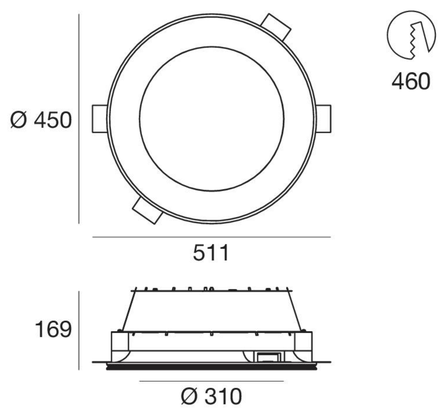

type			colour			optics	
White	CRI 80	**60828**	3000 K	2180 lm	**W**	diffused	**00**
			4000 K	2304 lm	**N**		

Suggested accessories

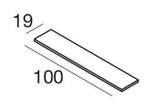

60830
Shim